A

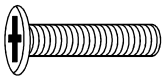

M6X30mm
3pcs

B

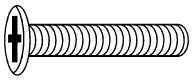

M6X40mm
3pcs

C



M6X12mm
2pcs

D

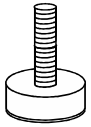

M6X20X10mm
3pcs

1

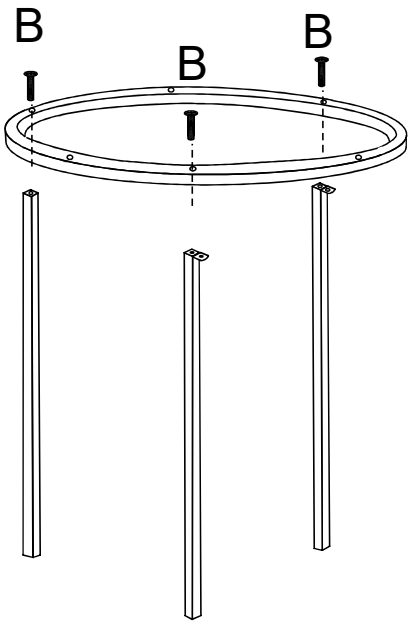

2

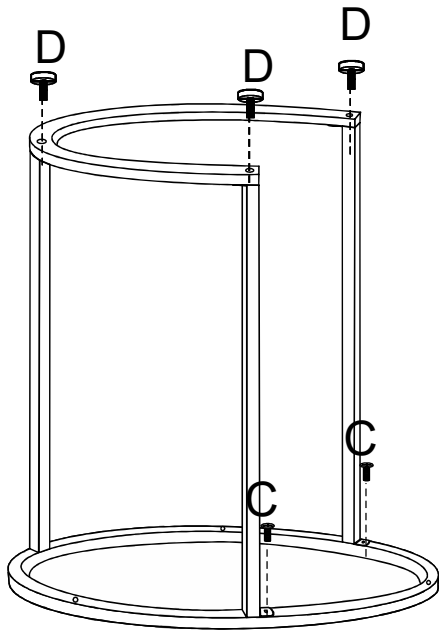

3

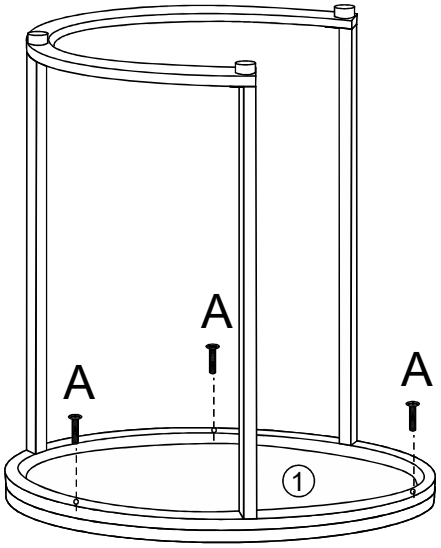

4

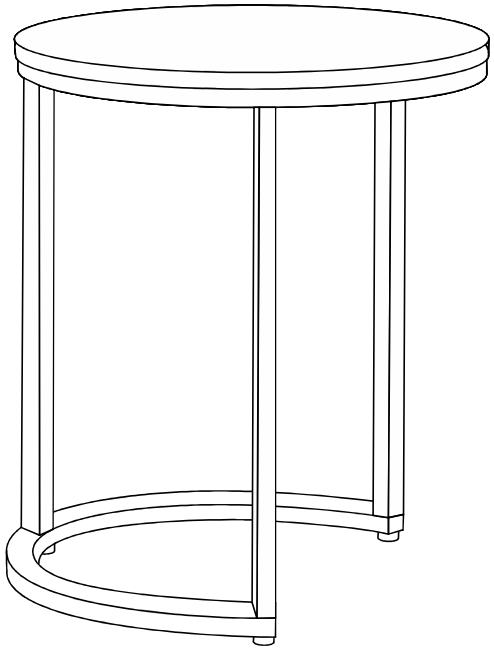

A

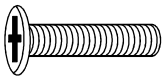

M6X30mm
3pcs

B

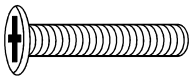

M6X40mm
3pcs

C



M6X12mm
2pcs

D

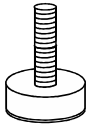

M6X20X10mm
3pcs

1

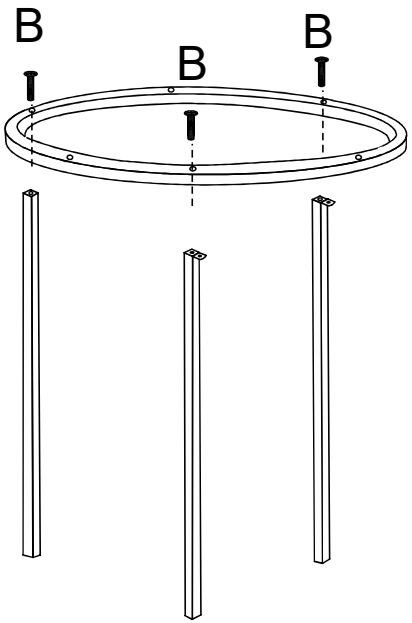

2

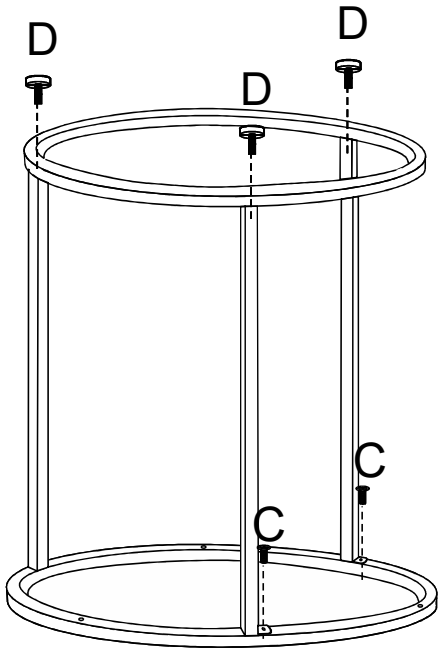

3

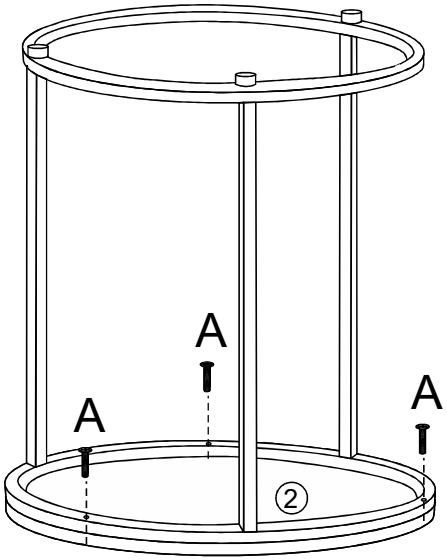

4

